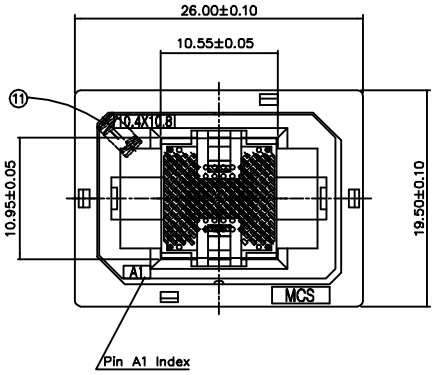


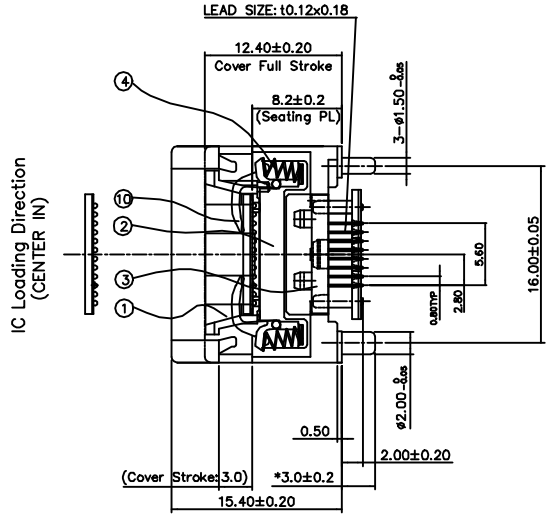


| SPECIFICATION | |
|---|---|
| CONTACT RESISTANCE | 50mΩ or less at 10mA (initial) |
| DIELECTRIC WITHSTANDING VOLTAGE | 100VAC for 1 Minute |
| INSULATION RESISTANCE | 1000MΩ or more at 100VDC |
| RATED CURRENT | 1A |
| OPERATING TEMPERATURE | (−65℃) − (+150℃) |
| ACTUATION FORCE | Max 1.8Kg |

| PARTS LIST | | | | |
|---|---|---|---|---|
| NO | NAME | MATERIAL | Q'TY | FINISH |
| 1 | ADAPTER | PEI(GF) | 1 | (Black) |
| 2 | SLIDER | PEI(GF) | 1 | (Black) |
| 3 | STOPPER | PEI(GF) | 1 | (Black) |
| 4 | LATCH SPRING | SUS | 2 | |
| 5 | LEAD GUIDE | PEI(GF) | 1 | |
| 6 | CONTACT | BeCu | 56 | Ni+Au |
| 7 | BASE | PEI(GF) | 1 | (Black) |
| 8 | COVER SPRING | SUS | 4 | |
| 9 | COVER | PEI(GF) | 1 | (Black) |
| 10 | LATCH | PEI(GF) | 2 | (Black) |
| 11 | SLIDER SPRING | SUS | 1 | |

IC Loading Direction
(CENTER IN)

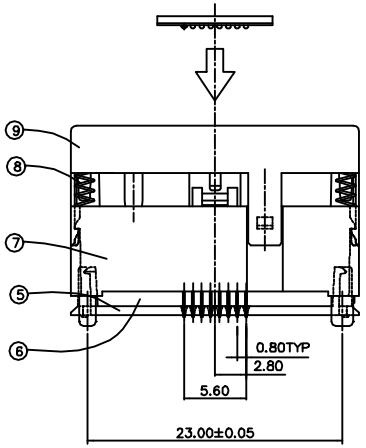


## IC Dimension

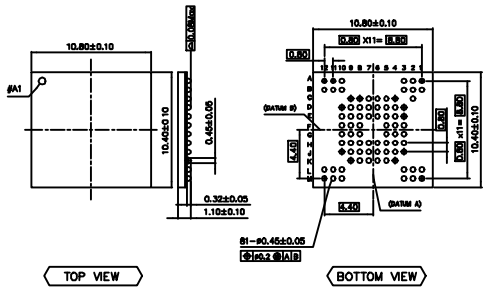


81-TBGA-10.4x10.8

| DRAWN | DATE | DWG NO |
|---|---|---|
| | 2001.06.13 | CH-01013-0 |

## PCB Layout(TOP VIEW)

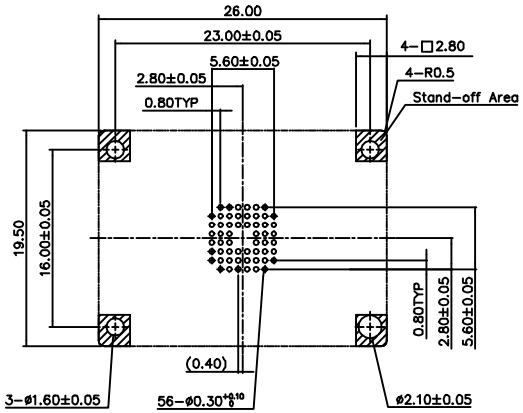


| REF. | NEXT ASS'Y | USED ON |
|---|---|---|
| | | |
| | | |
| | | |
| | | |

COMMON TOLERANCES

NUMERIC ± 0.10 ANGLE ±

| | |
|---|---|
| DRAWN | DATE '02.03.11 |
| DESIGNED | D.W.Hwang |
| CHECKED | |
| VERIFIED | |
| APPROVED | |

Micro Contact Solution

TITLE
56-81-TBGA-10.4x10.8

SIZE A3 | DWG NO SB056EB-SA

SCALE 1/1 | UNIT mm | SHEET 1 OF 1