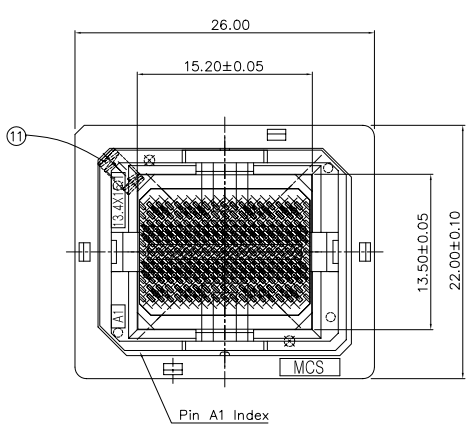

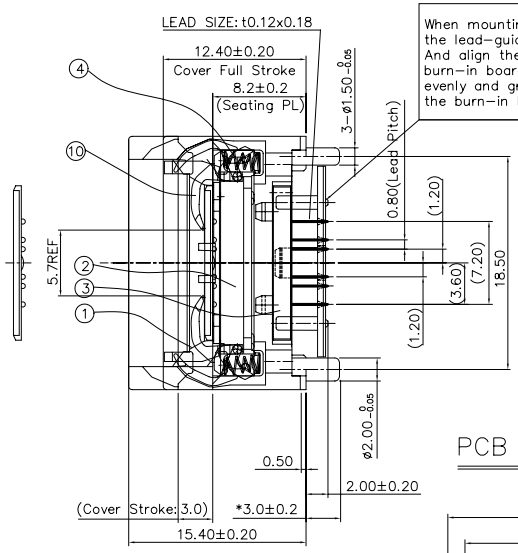

When mounting the socket onto burn-in board, pull down the lead-guide as shown on the side view bellow.
And align the positioning pins with the through holes of the burn-in boards properly. Press the socket down from the top evenly and gradually until the socket base stand-off lie on the burn-in board.

SPECIFICATION	
CONTACT RESISTANCE	50mΩ or less at 10mA , 20mV.(initial)
DIELECTRIC WITHSTANDING VOLTAGE	100VAC for 1 Minute
INSULATION RESISTANCE	1000MΩ or more at 100VDC
OPERATING TEMPERATURE	-40℃ to +150℃
ACTUATION FORCE	Max 2.5Kg(1.8kg)

PARTS LIST				
NO	NAME	MATERIAL	Q'TY	FINISH
1	ADAPTER	PEI(GF)	1	(Black)
2	SLIDER	PEI(GF)	1	(Black)
3	STOPPER	PEI(GF)	1	(Black)
4	LATCH SPRING	SUS	2	
5	LEAD GUIDE	PEI(GF)	1	
6	CONTACT	BeCu	92	Ni+Au
7	BASE	PEI(GF)	1	(Black)
8	COVER SPRING	SUS	4	
9	COVER	PEI(GF)	1	(Black)
10	LATCH	PEI(GF)	2	(Black)
11	SLIDER SPRING	SUS	1	

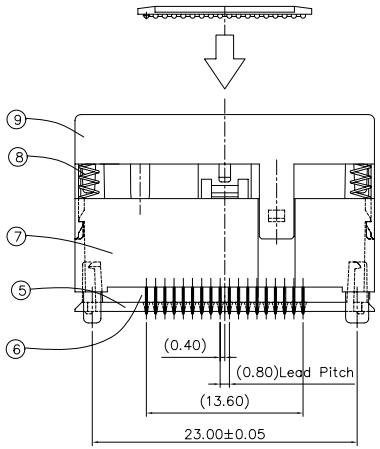

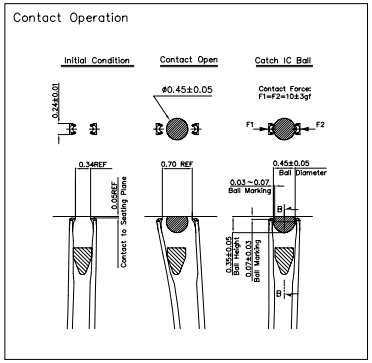

PCB Layout(TOP VIEW)

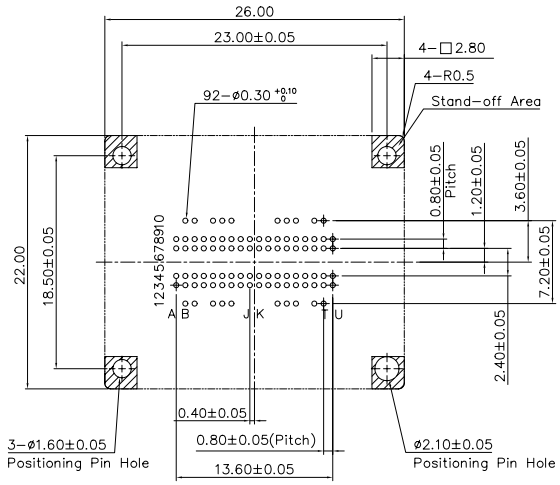

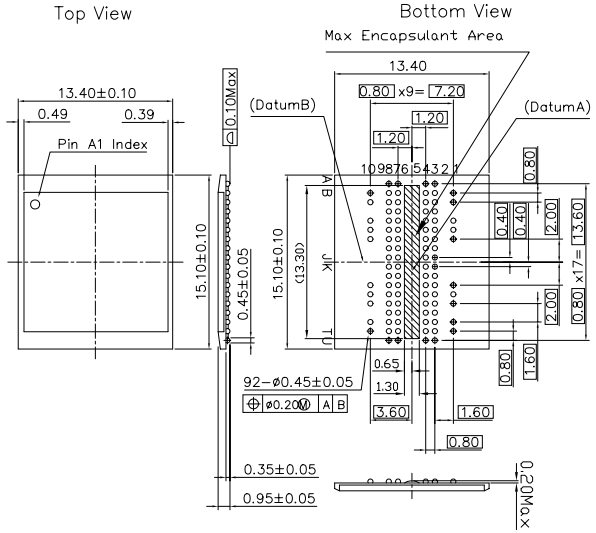

IC Dimension 92-WBGA-13.4X15.1

DRAWN	DATE	DWG NO
	2003.01.22	JI-030XX-0

Operating Method

1. IC Inserting Operation
   (a) Push the cover all the way down(3mm) until it stops then insert the IC on top of Adapter Part NO 1.
   (b) To lock the IC in place, release up the cover .

2. IC Removing Operation
   Push the cover all the way down(3mm) until it stops then take the IC out.
   (When the cover is pushed down, a vacuum method can be used to pull out the IC.)

REF.	NEXT ASS'Y	USED ON

COMMON TOLERANCES

NUMERIC	ANGLE
± 0.10	±

DRAWN	03/02/10
DATE	
DESIGNED	D.W.Hwang
CHECKED	
VERIFIED	
APPROVED	D.W.Hwang

MCS Micro Contact Solution

TITLE BGA Socket-22x26 (92-WBGA-13.4X15.1)

SIZE A3 | DWG NO SB2092E-SA

SCALE 1/1 | UNIT mm | SHEET 1 OF 1