When mounting the socket onto burn-in board, pull down the lead-guide as shown on the side view bellow.
And align the positioning pins with the through holes of the burn-in boards properly. Press the socket down from the top evenly and gradually until the socket base stand-off lie on the burn-in board.

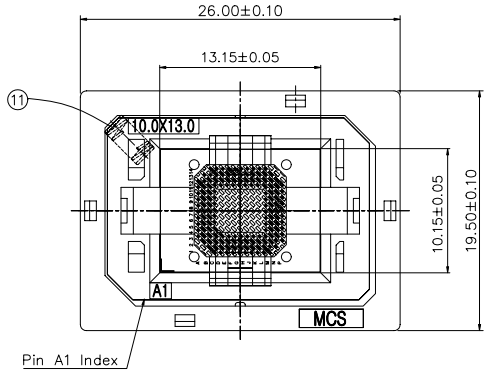

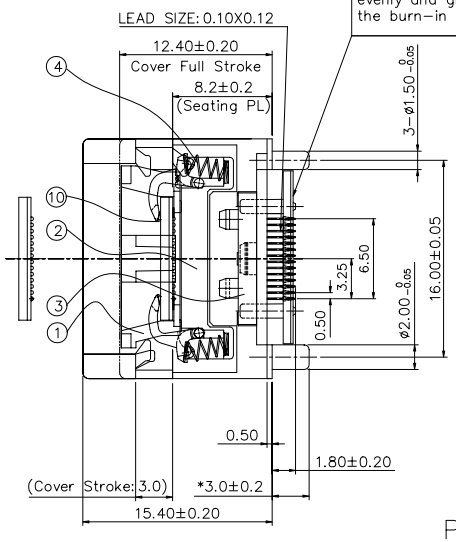

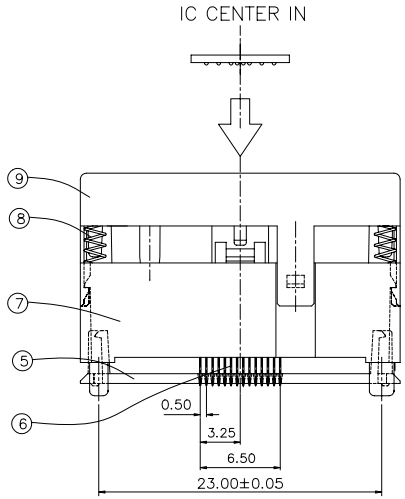

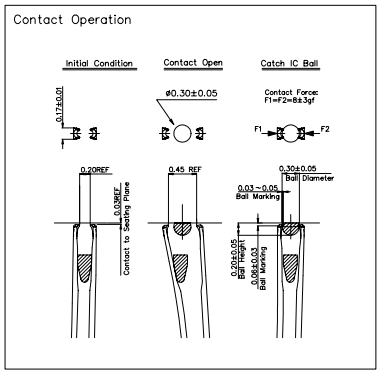

PCB Layout(TOP VIEW)

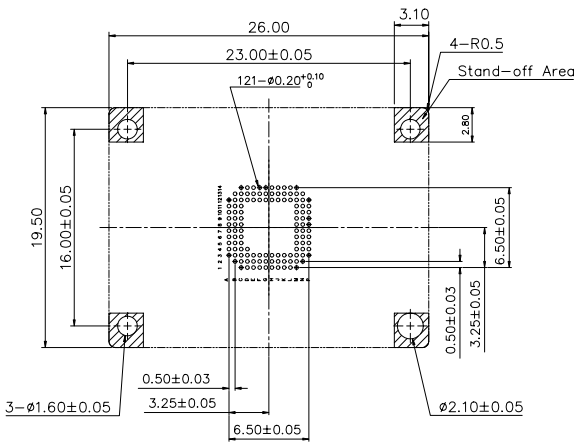

SPECIFICATION	
CONTACT RESISTANCE	50mΩ or less at 10mA (initial)
OPERATING TEMPERATURE	(-65℃) - (+150℃)
ACTUATION FORCE	Max 1.8Kg

PARTS LIST

NO	NAME	MATERIAL	Q'TY	FINISH
1	ADAPTER	PEI(GF)	1	(Black)
2	SLIDER	PEI(GF)	1	(Black)
3	STOPPER	PEI(GF)	1	(Black)
4	LATCH SPRING	SUS	2	
5	LEAD GUIDE	PEI(GF)	1	
6	CONTACT	BeCu	121	Ni+Au
7	BASE	PEI(GF)	1	(Black)
8	COVER SPRING	SUS	4	
9	COVER	PEI(GF)	1	(Black)
10	LATCH	PEI(GF)	2	(Black)
11	SLIDER SPRING	SUS	1	

IC Dimension

121-FBGA-10.0X13.0

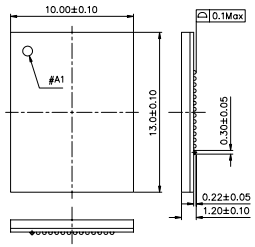

(Top View)

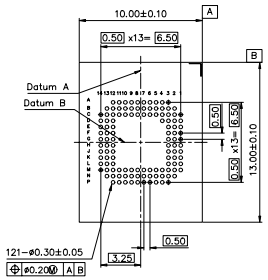

(Bottom View)

DRAWN	DATE	DWG NO

Operating Method

1. IC Inserting Operation
   (a) Push the cover all the way down(3mm) until it stops then insert the IC on top of Adapter Part NO 1.
   (b) To lock the IC in place, release up the cover .

2. IC Removing Operation
   Push the cover all the way down(3mm) until it stops then take the IC out.
   (When the cover is pushed down, a vacuum method can be used to pull out the IC.)

REF.	NEXT ASS'Y	USED ON

COMMON TOLERANCES

NUMERIC	ANGLE
± 0.10	±

DRAWN	DATE '03.09.15
DESIGNED	D.W.Hwang
CHECKED	
VERIFIED	
APPROVED	D.W.Hwang

MCS Micro Contact Solution

TITLE 0.5P-BGA Socket 121-FBGA-10.0X13.0

SIZE A3 | DWG NO SB121FC-SB

SCALE NS | UNIT mm | SHEET 1 OF 1