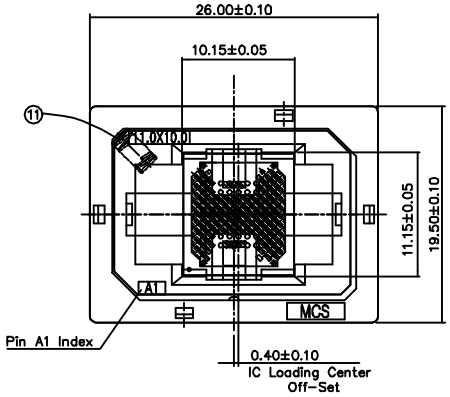

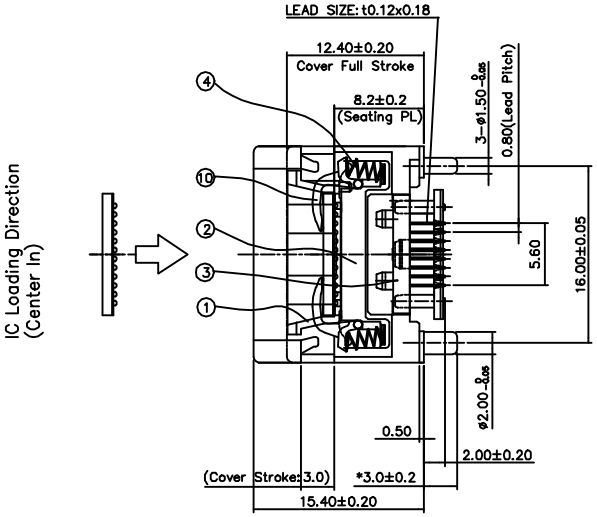

SPECIFICATION	
CONTACT RESISTANCE	50mΩ or less at 10mA (initial)
DIELECTRIC WITHSTANDING VOLTAGE	100VAC for 1 Minute
INSULATION RESISTANCE	1000MΩ or more at 100VDC
RATED CURRENT	1A
OPERATING TEMPERATURE	(-65℃) - (+150℃)
ACTUATION FORCE	Max 1.8Kg

PARTS LIST				
NO	NAME	MATERIAL	Q'TY	FINISH
1	IC GUIDE	PEI(GF)	1	(Black)
2	SLIDE	PEI(GF)	1	(Black)
3	ADAPTER	PEI(GF)	1	(Black)
4	HOLDER SPRING	SUS	2	
5	CONTACT GUIDE	PEI(GF)	1	
6	CONTACT	BeCu	72	Ni+Au
7	BODY	PEI(GF)	1	(Black)
8	COVER SPRING	SUS	4	
9	COVER	PEI(GF)	1	(Black)
10	IC HOLDER	PEI(GF)	2	(Black)
11	SLIDE SPRING	SUS	1	

IC Loading Direction
(0.4 Shift In)

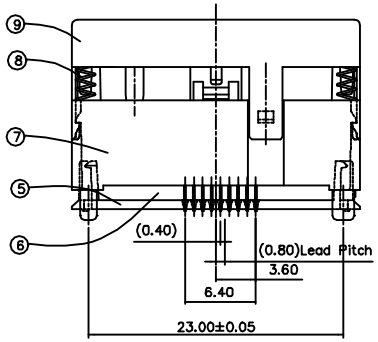

80-TBGA-11.0x10.0 Dimension

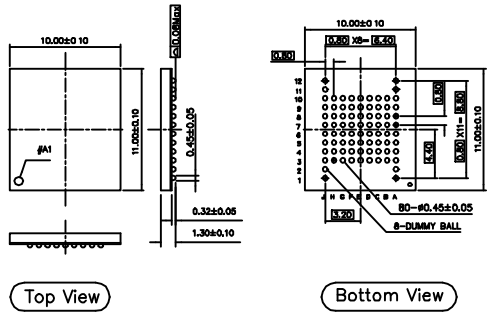

DRAWN	DATE	DWG NO
	2002.01.05	CH-02001-0

PCB Layout(TOP VIEW)

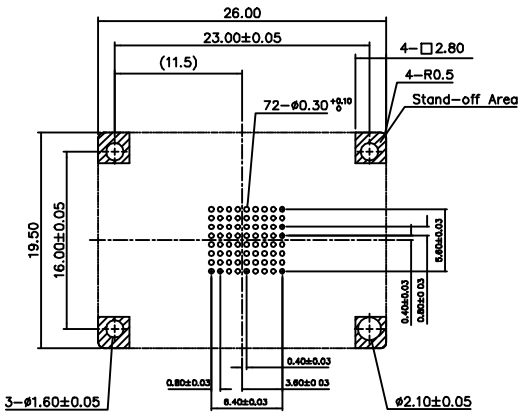

REF.	NEXT ASS'Y	USED ON

COMMON TOLERANCES

NUMERIC ± 0.10 ANGLE ±

DRAWN	'02.003.11
DATE	
DESIGNED	D.W.Hwang
CHECKED	
VERIFIED	
APPROVED	D.W.Hwang

Micro Contact Solution

TITLE
72-80-TBGA-11x10

SIZE A3 | DWG NO SB072EB-SA

SCALE 1/1 | UNIT mm | SHEET 1 OF 1